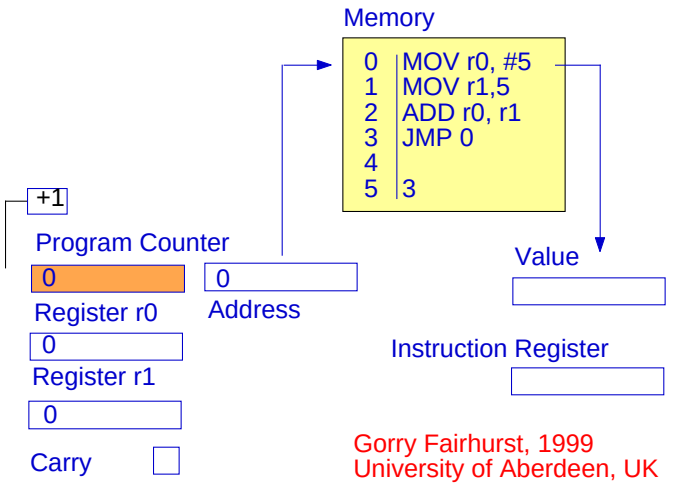
Memory
0 MOV r0, #5
1 MOV r1,5
2 ADD r0, r1
3 JMP 0
4
5 3
+1
Program Counter
0
0
Address
Value
Register r0
0
Instruction Register
Register r1
0
Carry
Gorry Fairhurst, 1999
University of Aberdeen, UK

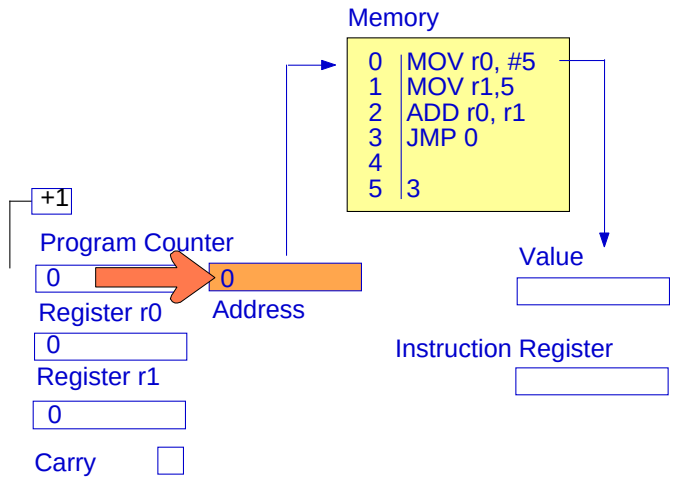
Memory
0 MOV r0, #5
1 MOV r1,5
2 ADD r0, r1
3 JMP 0
4
5 3
+1
Program Counter
0
0
Address
Value
Register r0
0
Instruction Register
Register r1
0
Carry

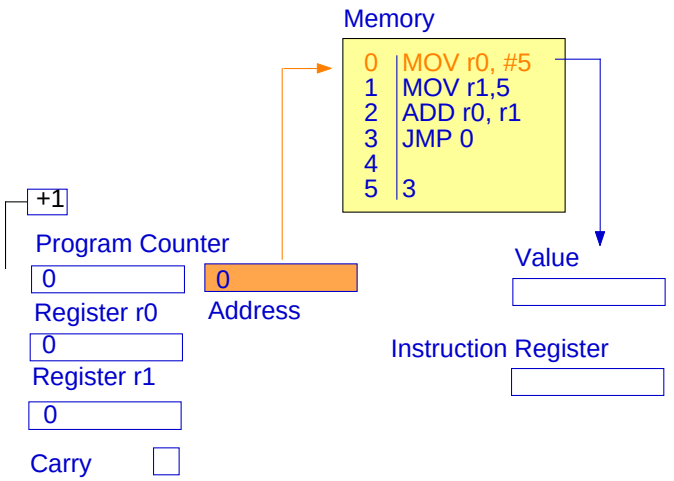
Memory
0 MOV r0, #5
1 MOV r1,5
2 ADD r0, r1
3 JMP 0
4
5 3
+1
Program Counter
0
0
Address
Value
Register r0
0
Instruction Register
Register r1
0
Carry

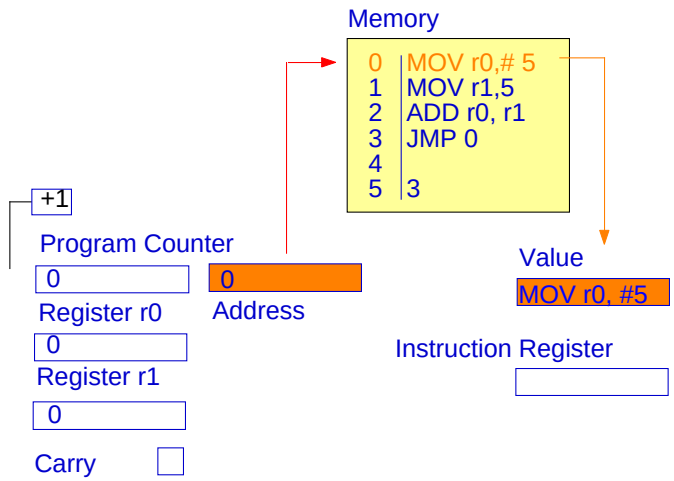
Memory
0 MOV r0,# 5
1 MOV r1,5
2 ADD r0, r1
3 JMP 0
4
5 3
+1
Program Counter
0
0
Address
Value
MOV r0, #5
Register r0
0
Instruction Register
Register r1
0
Carry

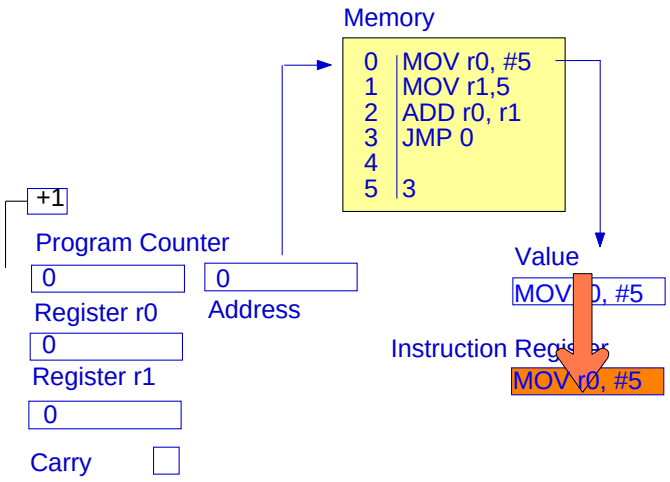
Memory
0 MOV r0, #5
1 MOV r1,5
2 ADD r0, r1
3 JMP 0
4
5 3
+1
Program Counter
0
0
Address
Value
MOV r0, #5
Register r0
0
Instruction Register
MOV r0, #5
Register r1
0
Carry

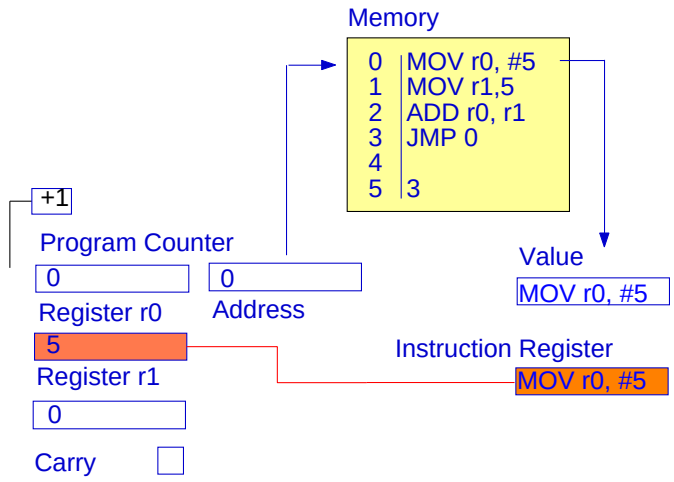
Memory
0 MOV r0, #5
1 MOV r1,5
2 ADD r0, r1
3 JMP 0
4
5 3
+1
Program Counter
0
0
Address
Value
MOV r0, #5
Register r0
5
Instruction Register
MOV r0, #5
Register r1
0
Carry

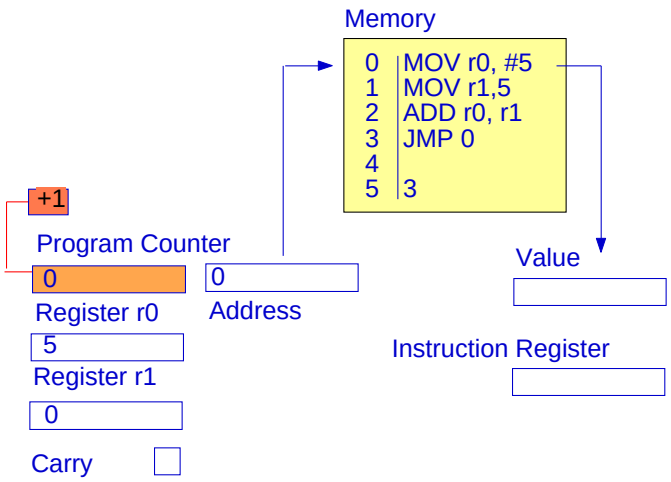
Memory
0 MOV r0, #5
1 MOV r1,5
2 ADD r0, r1
3 JMP 0
4
5 3
+1
Program Counter
0
0
Address
Value
Register r0
5
Instruction Register
Register r1
0
Carry

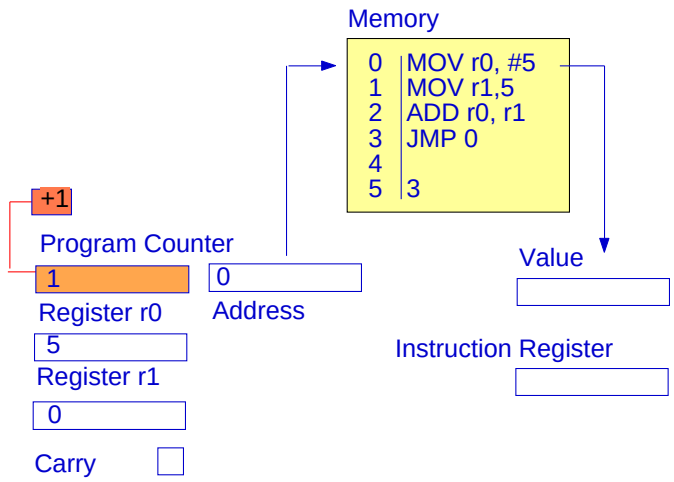
Memory
0 MOV r0, #5
1 MOV r1,5
2 ADD r0, r1
3 JMP 0
4
5 3
+1
Program Counter
1
0
Address
Value
Register r0
5
Instruction Register
Register r1
0
Carry

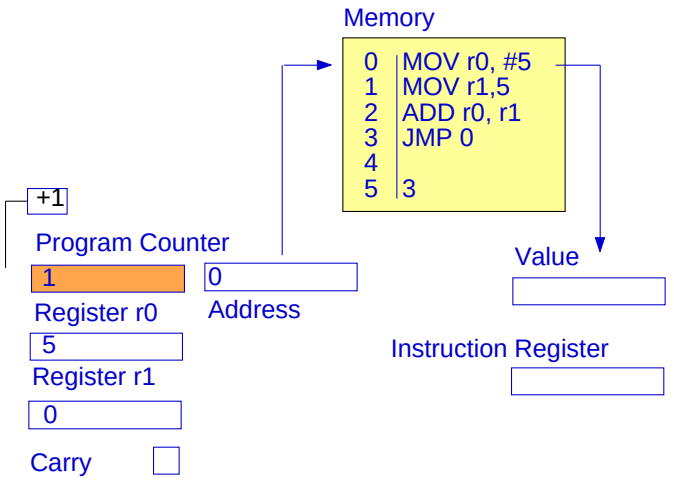
Memory
0 MOV r0, #5
1 MOV r1,5
2 ADD r0, r1
3 JMP 0
4
5 3
+1
Program Counter
1
0
Address
Value
Register r0
5
Instruction Register
Register r1
0
Carry

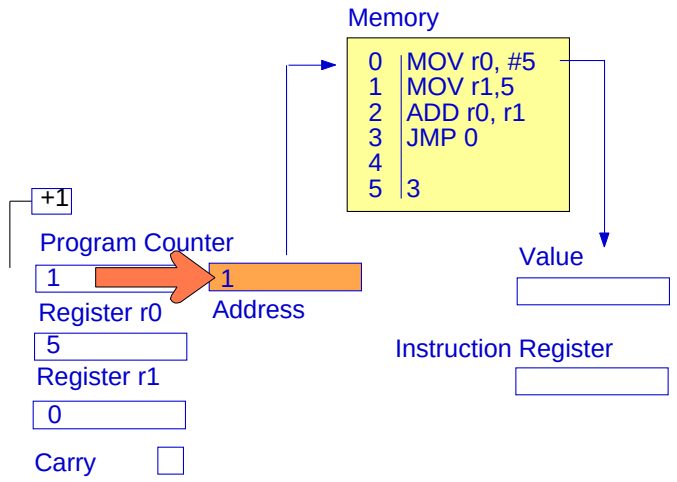
Memory
0 MOV r0, #5
1 MOV r1,5
2 ADD r0, r1
3 JMP 0
4
5 3
+1
Program Counter
1
1
Address
Value
Register r0
5
Instruction Register
Register r1
0
Carry

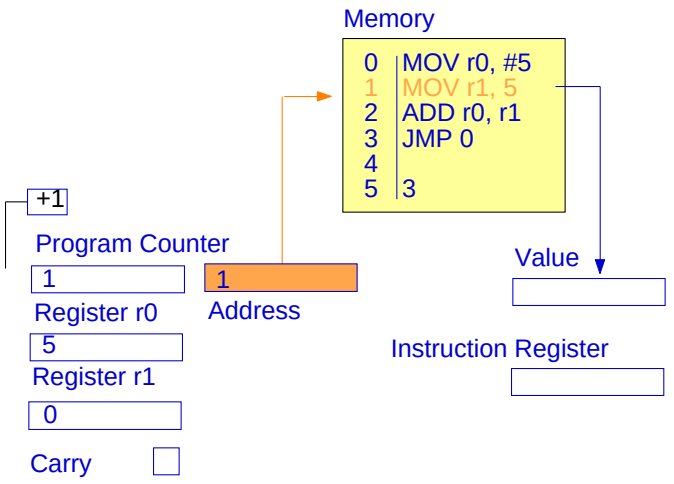
Memory
0 MOV r0, #5
1 MOV r1, 5
2 ADD r0, r1
3 JMP 0
4
5 3
+1
Program Counter
1
1
Address
Value
Register r0
5
Instruction Register
Register r1
0
Carry

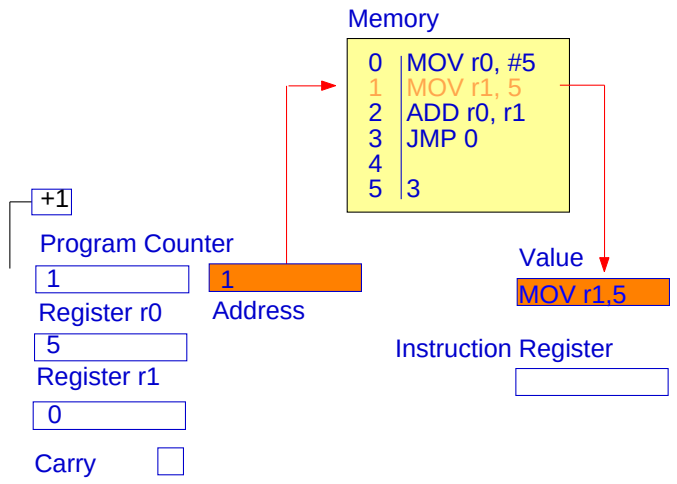
Memory
0 MOV r0, #5
1 MOV r1, 5
2 ADD r0, r1
3 JMP 0
4
5 3
+1
Program Counter
1
1
Address
Value
MOV r1,5
Register r0
5
Instruction Register
Register r1
0
Carry

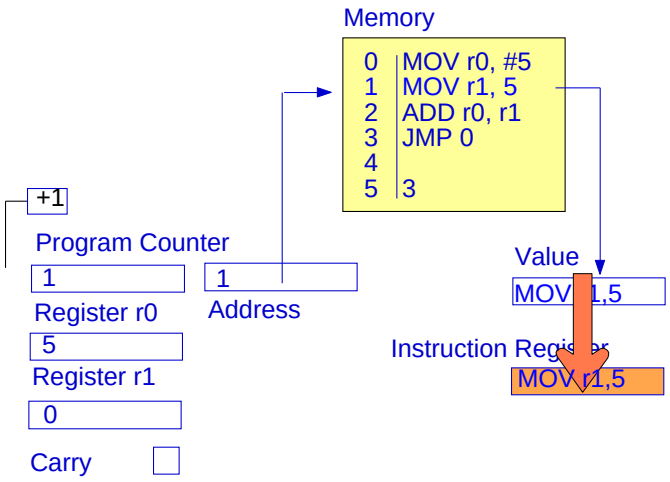
Memory
0 MOV r0, #5
1 MOV r1, 5
2 ADD r0, r1
3 JMP 0
4
5 3
+1
Program Counter
1
1
Address
Value
MOV r1,5
Register r0
5
Instruction Register
Register r1
MOV r1,5
0
Carry

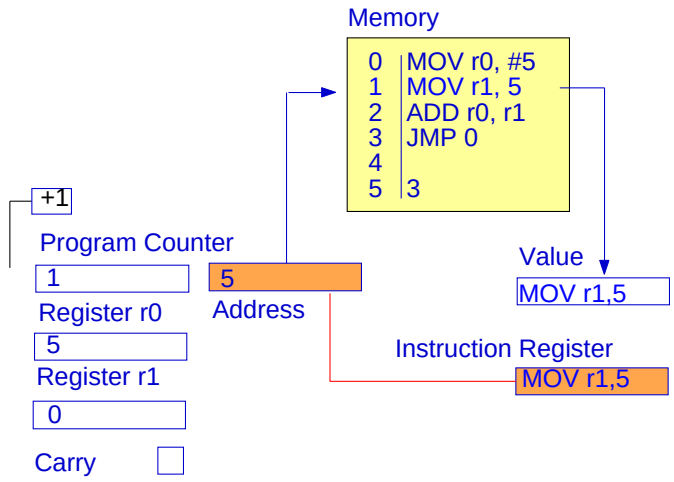
Memory
0 MOV r0, #5
1 MOV r1, 5
2 ADD r0, r1
3 JMP 0
4
5 3
+1
Program Counter
1
5
Address
Value
MOV r1,5
Register r0
5
Instruction Register
Register r1
MOV r1,5
0
Carry

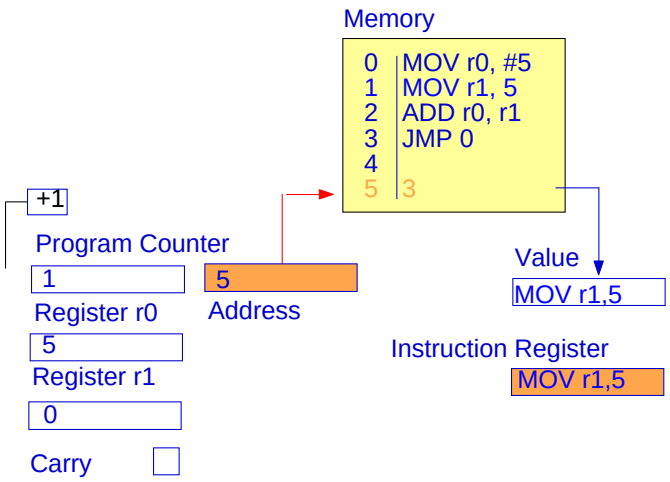
Memory
0 MOV r0, #5
1 MOV r1, 5
2 ADD r0, r1
3 JMP 0
4
5 3
+1
Program Counter
1
5
Address
Value
MOV r1,5
Register r0
5
Instruction Register
Register r1
MOV r1,5
0
Carry

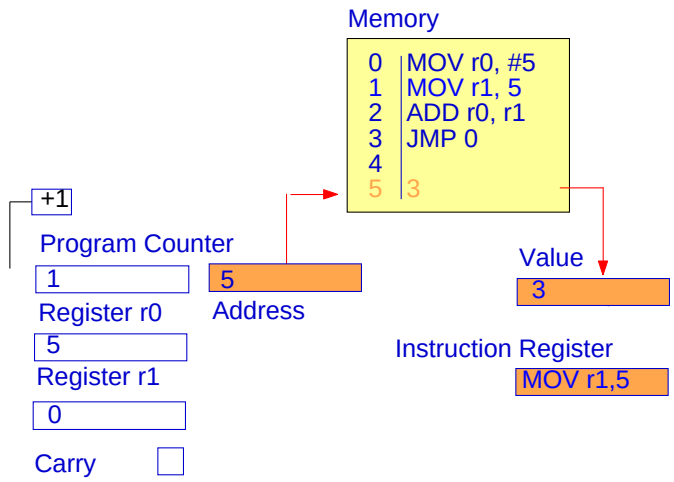
Memory
0 MOV r0, #5
1 MOV r1, 5
2 ADD r0, r1
3 JMP 0
4
5 3
+1
Program Counter
1
5
Address
Value
3
Register r0
5
Instruction Register
Register r1
MOV r1,5
0
Carry

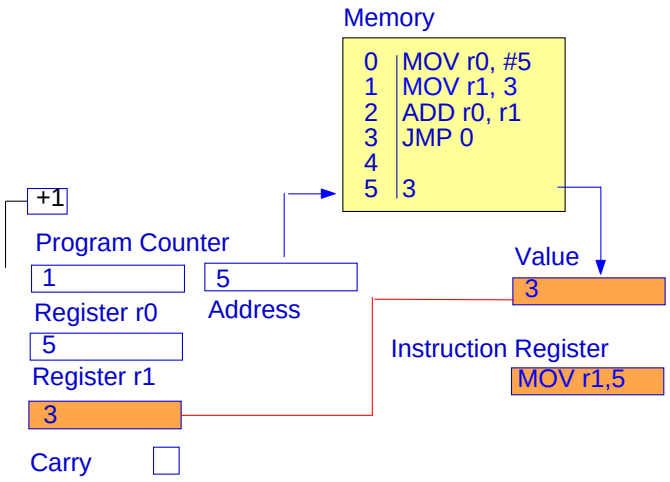
Memory
0 MOV r0, #5
1 MOV r1, 3
2 ADD r0, r1
3 JMP 0
4
5 3
+1
Program Counter
1
5
Address
Value
3
Register r0
5
Instruction Register
MOV r1,5
Register r1
3
Carry

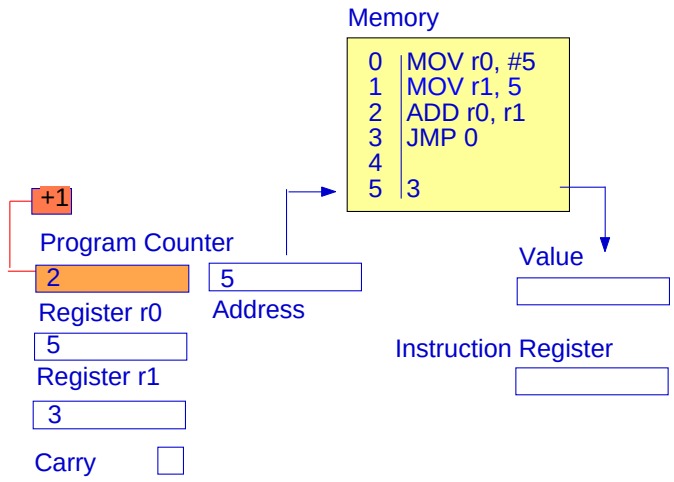
Memory
0 MOV r0, #5
1 MOV r1, 5
2 ADD r0, r1
3 JMP 0
4
5 3
+1
Program Counter
2
5
Address
Value
Register r0
5
Instruction Register
Register r1
3
Carry

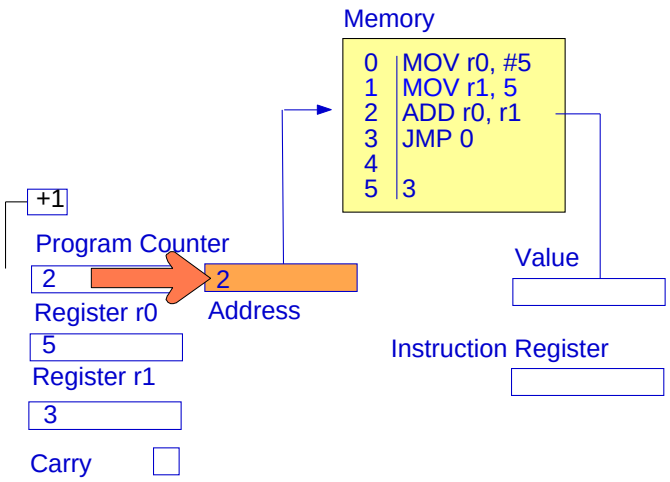
Memory
0 MOV r0, #5
1 MOV r1, 5
2 ADD r0, r1
3 JMP 0
4
5 3
+1
Program Counter
2
2
Address
Value
Register r0
5
Instruction Register
Register r1
3
Carry

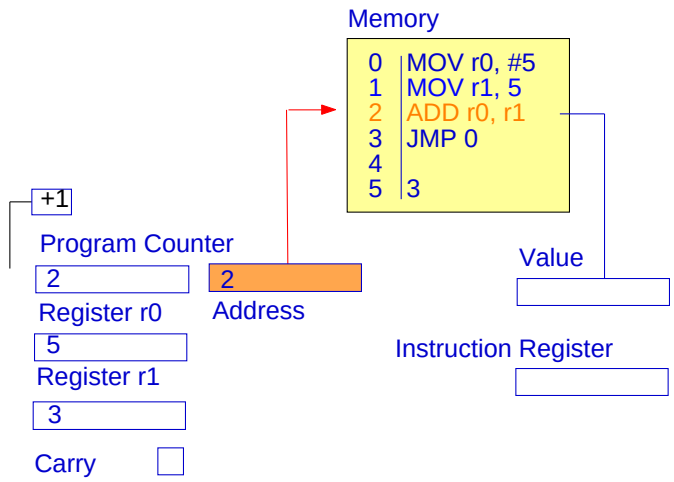
Memory
0 MOV r0, #5
1 MOV r1, 5
2 ADD r0, r1
3 JMP 0
4
5 3
+1
Program Counter
2
2
Address
Value
Register r0
5
Instruction Register
Register r1
3
Carry

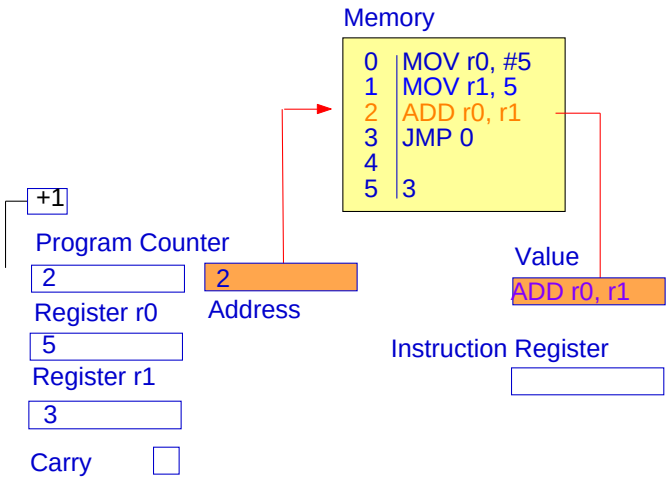
Memory
0 MOV r0, #5
1 MOV r1, 5
2 ADD r0, r1
3 JMP 0
4
5 3
+1
Program Counter
2
2
Address
Value
ADD r0, r1
Register r0
5
Instruction Register
Register r1
3
Carry

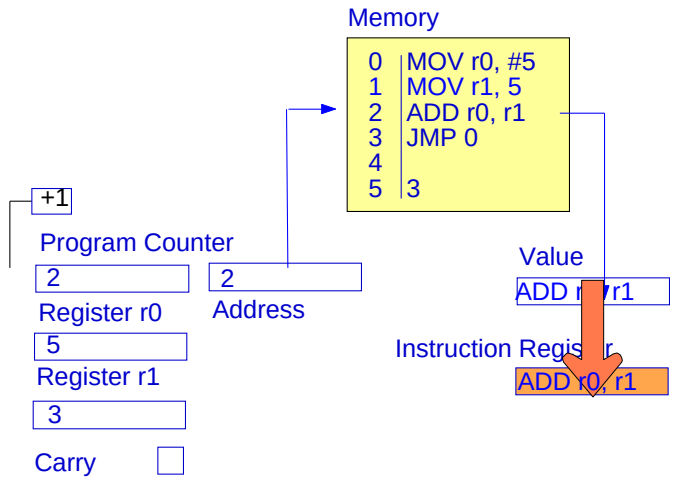
Memory
0 MOV r0, #5
1 MOV r1, 5
2 ADD r0, r1
3 JMP 0
4
5 3
+1
Program Counter
2
2
Address
Value
Register r0
5
Instruction Register
ADD r0, r1
Register r1
3
Carry

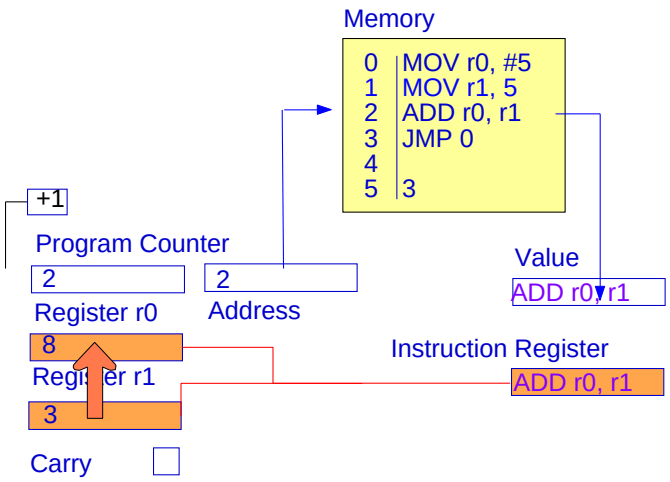
Memory
0 MOV r0, #5
1 MOV r1, 5
2 ADD r0, r1
3 JMP 0
4
5 3
+1
Program Counter
2
2
Address
Value
ADD r0, r1
Register r0
8
Instruction Register
ADD r0, r1
Register r1
3
Carry

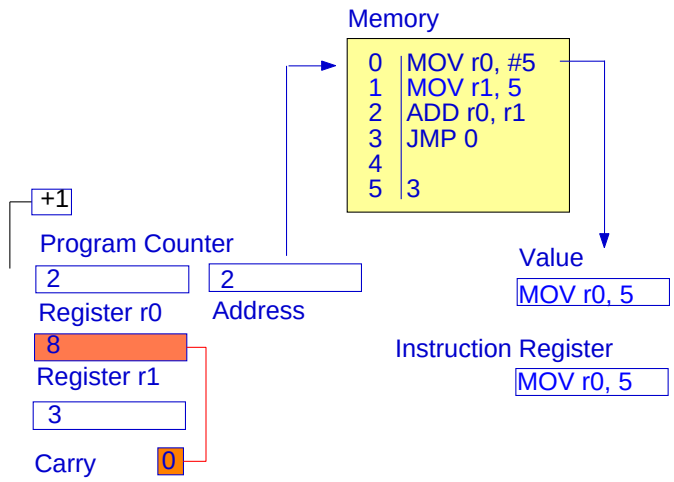
Memory
0 MOV r0, #5
1 MOV r1, 5
2 ADD r0, r1
3 JMP 0
4
5 3
+1
Program Counter
2
2
Address
Value
MOV r0, 5
Register r0
8
Instruction Register
MOV r0, 5
Register r1
3
Carry
0

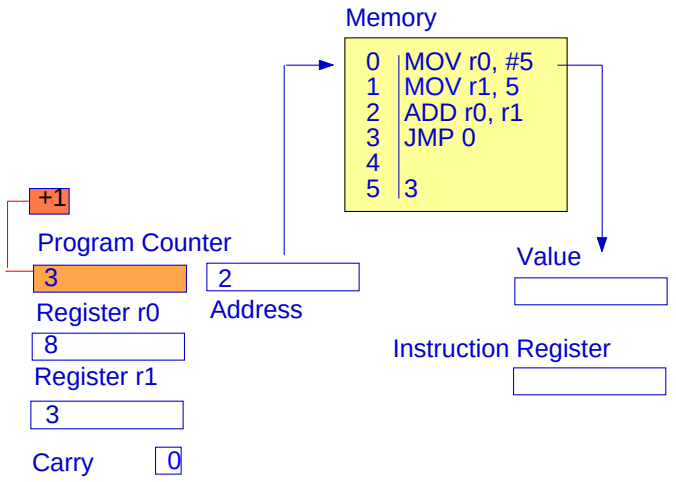
Memory
0 MOV r0, #5
1 MOV r1, 5
2 ADD r0, r1
3 JMP 0
4
5 3
+1
Program Counter
3
2
Address
Value
Register r0
8
Instruction Register
Register r1
3
Carry
0

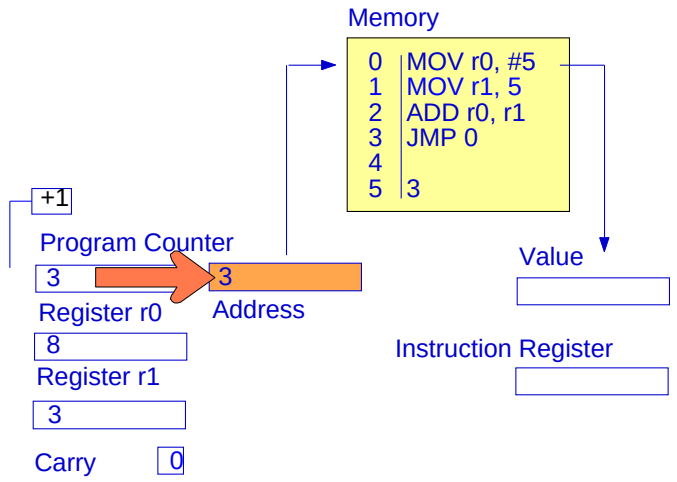
Memory
0 MOV r0, #5
1 MOV r1, 5
2 ADD r0, r1
3 JMP 0
4
5 3
+1
Program Counter
3
3
Address
Value
Register r0
8
Instruction Register
Register r1
3
Carry
0

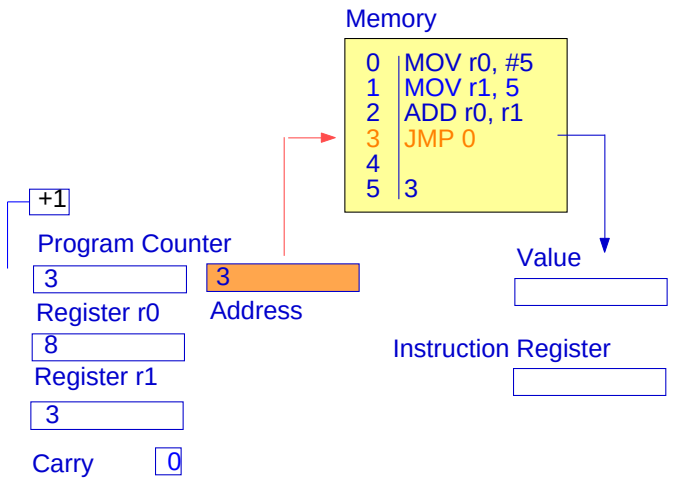
Memory
0 MOV r0, #5
1 MOV r1, 5
2 ADD r0, r1
3 JMP 0
4
5 3
+1
Program Counter
3
3
Address
Value
Register r0
8
Instruction Register
Register r1
3
Carry
0

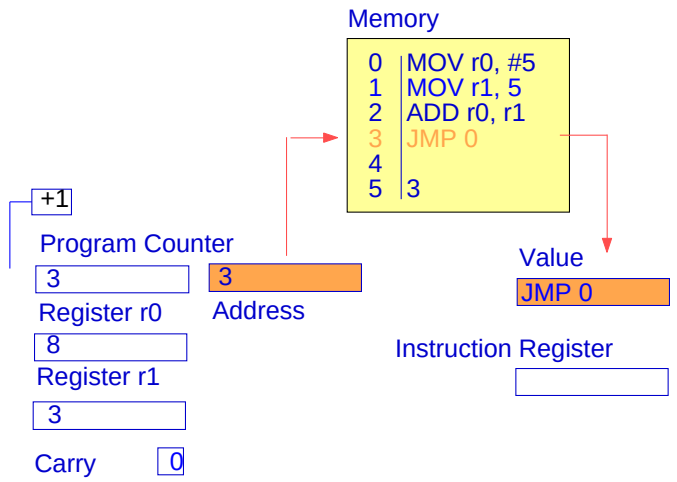
Memory
0 MOV r0, #5
1 MOV r1, 5
2 ADD r0, r1
3 JMP 0
4
5 3
+1
Program Counter
3
3
Address
Value
JMP 0
Register r0
8
Instruction Register
Register r1
3
Carry
0

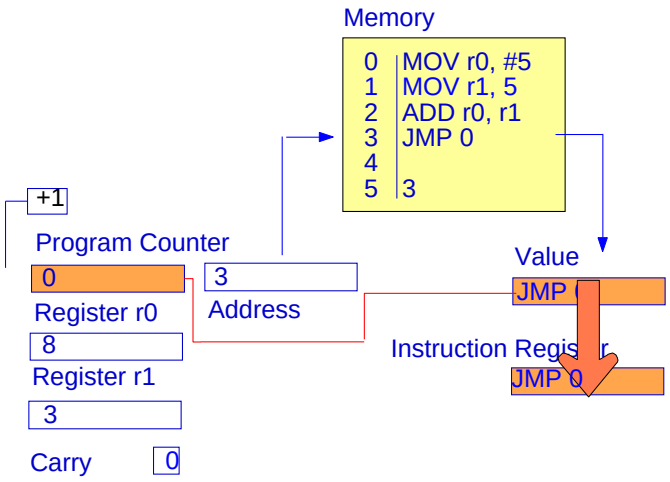
Memory
0 MOV r0, #5
1 MOV r1, 5
2 ADD r0, r1
3 JMP 0
4
5 3
+1
Program Counter
0
3
Address
Value
JMP 0
Register r0
8
Instruction Register
JMP 0
Register r1
3
Carry
0

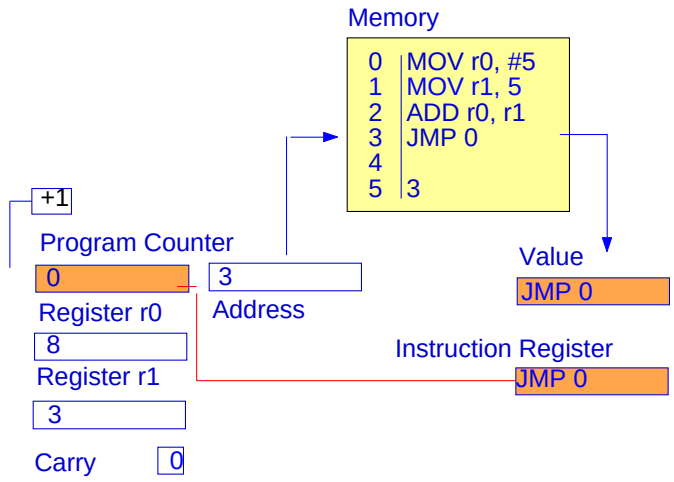
Memory
0 MOV r0, #5
1 MOV r1, 5
2 ADD r0, r1
3 JMP 0
4
5 3
+1
Program Counter
0
3
Address
Value
JMP 0
Register r0
8
Instruction Register
JMP 0
Register r1
3
Carry
0