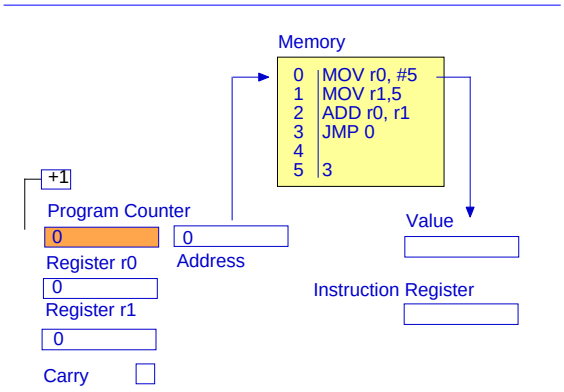
Memory
0 MOV r0, #5
1 MOV r1,5
2 ADD r0, r1
3 JMP 0
4
5 3
+1
Program Counter
0
Register r0
0
Address
Value
Instruction Register
0
Register r1
0
Carry

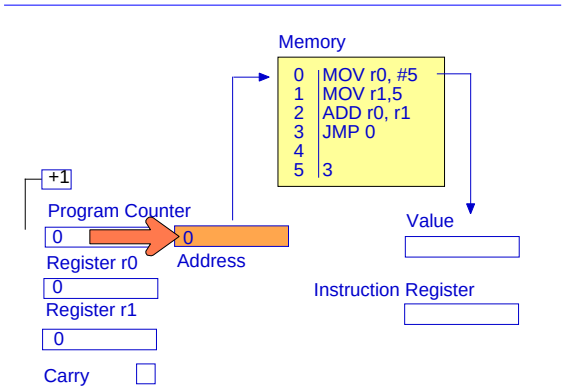
Memory
0 MOV r0, #5
1 MOV r1,5
2 ADD r0, r1
3 JMP 0
4
5 3
+1
Program Counter
0
Register r0
0
Address
Value
Instruction Register
0
Register r1
0
Carry

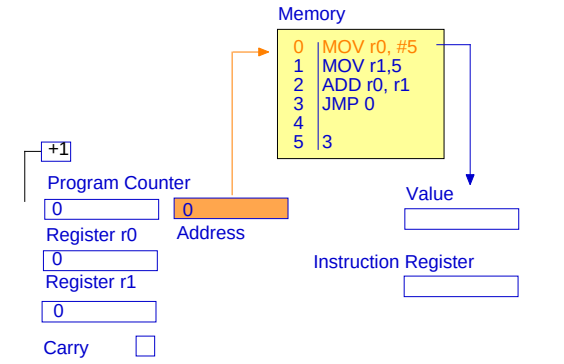
Memory
0 MOV r0, #5
1 MOV r1,5
2 ADD r0, r1
3 JMP 0
4
5 3
+1
Program Counter
0
Register r0
0
Address
Value
Instruction Register
0
Register r1
0
Carry

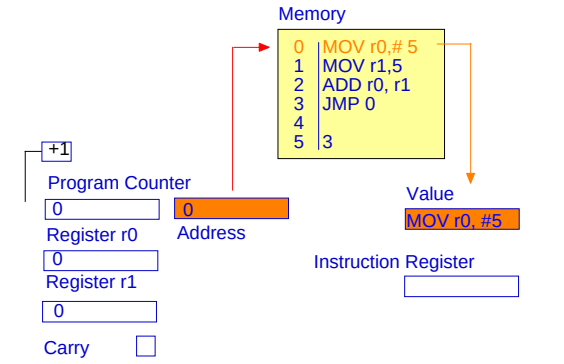
Memory
0 MOV r0,# 5
1 MOV r1,5
2 ADD r0, r1
3 JMP 0
4
5 3
+1
Program Counter
0
Register r0
0
Address
Value
MOV r0, #5
Instruction Register
0
Register r1
0
Carry

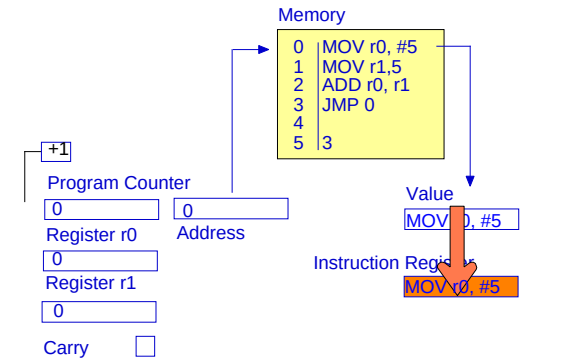
Memory
0 MOV r0, #5
1 MOV r1,5
2 ADD r0, r1
3 JMP 0
4
5 3
+1
Program Counter
0
Register r0
0
Address
Value
MOV r0, #5
Instruction Register
MOV r0, #5
0
Register r1
0
Carry

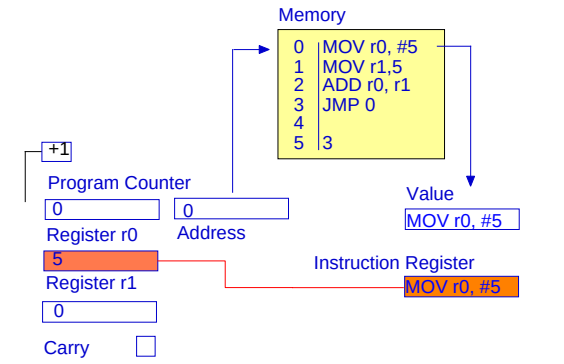
Memory
0 MOV r0, #5
1 MOV r1,5
2 ADD r0, r1
3 JMP 0
4
5 3
+1
Program Counter
0
Register r0
0
Address
Value
MOV r0, #5
Instruction Register
MOV r0, #5
5
Register r1
0
Carry

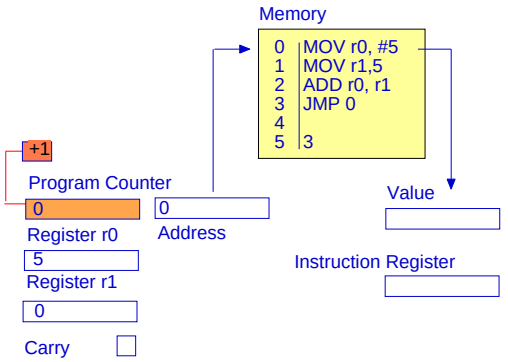
Memory
0 MOV r0, #5
1 MOV r1,5
2 ADD r0, r1
3 JMP 0
4
5 3
+1
Program Counter
0
Register r0
5
Register r1
0
Carry
0
Address
Value
Instruction Register

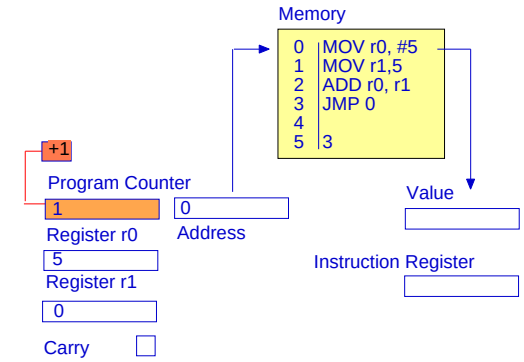
Memory
0 MOV r0, #5
1 MOV r1,5
2 ADD r0, r1
3 JMP 0
4
5 3
+1
Program Counter
1
Register r0
5
Register r1
0
Carry
0
Address
Value
Instruction Register

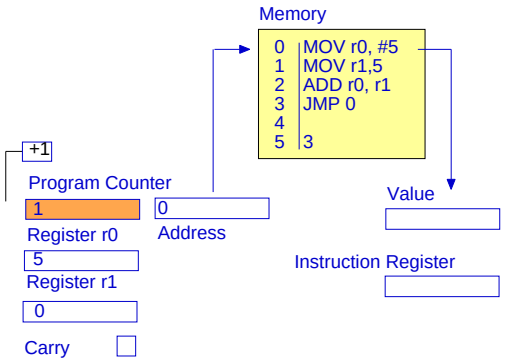
Memory
0 MOV r0, #5
1 MOV r1,5
2 ADD r0, r1
3 JMP 0
4
5 3
+1
Program Counter
1
Register r0
5
Register r1
0
Carry
0
Address
Value
Instruction Register

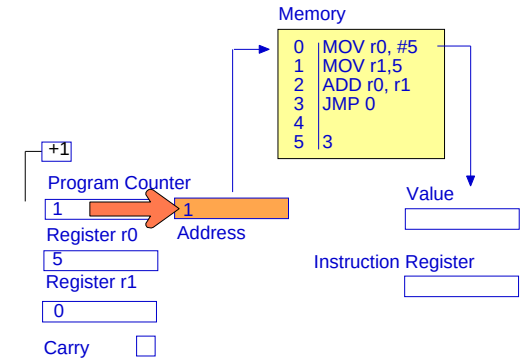
Memory
0 MOV r0, #5
1 MOV r1,5
2 ADD r0, r1
3 JMP 0
4
5 3
+1
Program Counter
1
Register r0
5
Register r1
0
Carry
1
Address
Value
Instruction Register

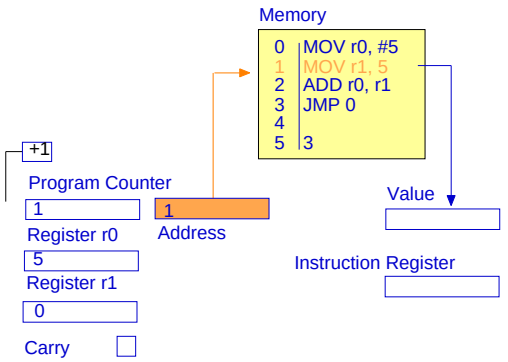
Memory
0 MOV r0, #5
1 MOV r1, 5
2 ADD r0, r1
3 JMP 0
4
5 3
+1
Program Counter
1
Register r0
5
Register r1
0
Carry
1
Address
Value
Instruction Register

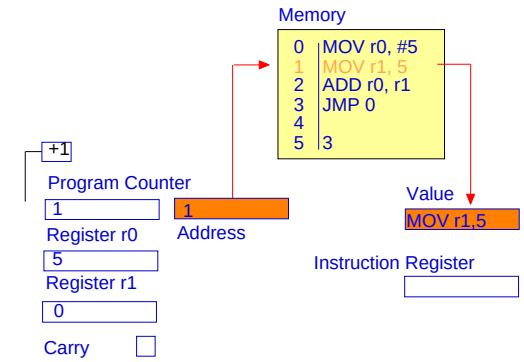
Memory
0 MOV r0, #5
1 MOV r1, 5
2 ADD r0, r1
3 JMP 0
4
5 3
+1
Program Counter
1
Register r0
5
Register r1
0
Carry
1
Address
Value
MOV r1,5
Instruction Register

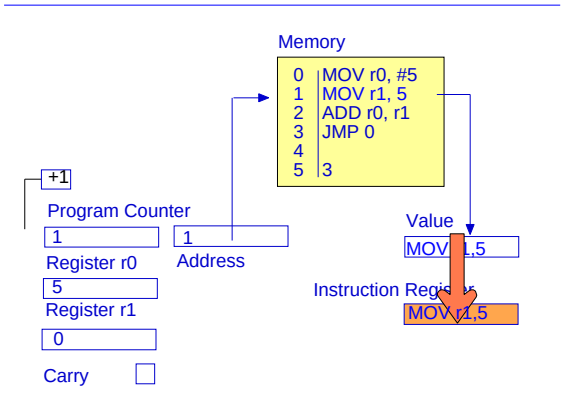
Memory
0 MOV r0, #5
1 MOV r1, 5
2 ADD r0, r1
3 JMP 0
4
5 3
+1
Program Counter
1
Register r0
5
Register r1
0
Carry
1
Address
Value
MOV r1,5
Instruction Register
MOV r1,5

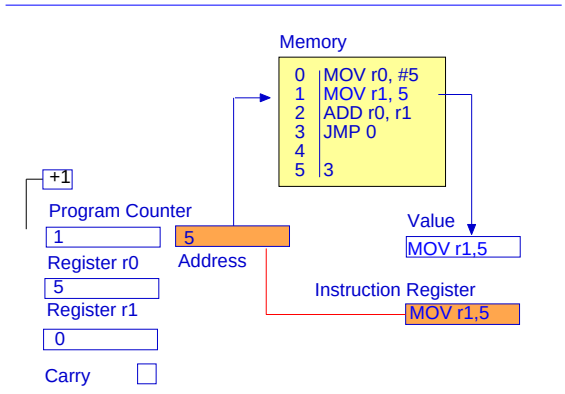
Memory
0 MOV r0, #5
1 MOV r1, 5
2 ADD r0, r1
3 JMP 0
4
5 3
+1
Program Counter
1
Register r0
5
Register r1
0
Carry
5
Address
Value
MOV r1,5
Instruction Register
MOV r1,5

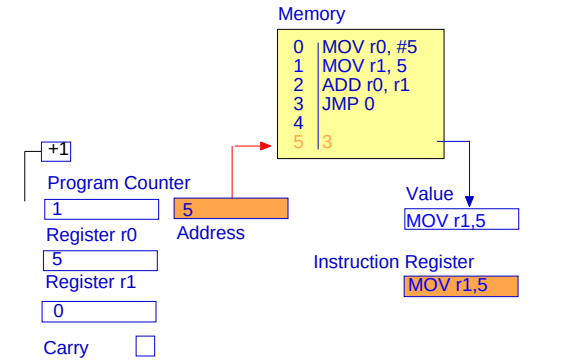
Memory
0 MOV r0, #5
1 MOV r1, 5
2 ADD r0, r1
3 JMP 0
4
5 3
+1
Program Counter
1
Register r0
5
Register r1
0
Carry
5
Address
Value
MOV r1,5
Instruction Register
MOV r1,5

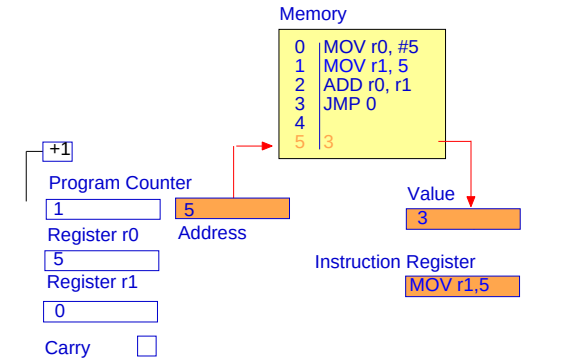
Memory
0 MOV r0, #5
1 MOV r1, 5
2 ADD r0, r1
3 JMP 0
4
5 3
+1
Program Counter
1
Register r0
5
Register r1
0
Carry
5
Address
Value
3
Instruction Register
MOV r1,5

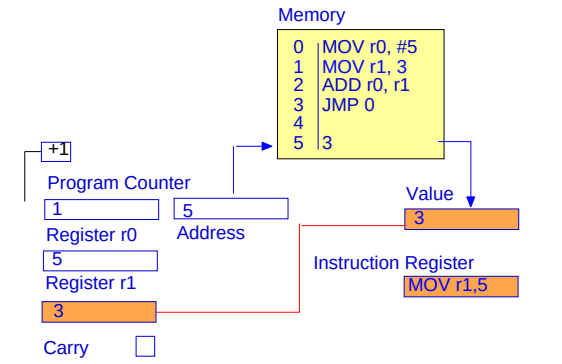
Memory
0 MOV r0, #5
1 MOV r1, 3
2 ADD r0, r1
3 JMP 0
4
5 3
+1
Program Counter
1
Register r0
5
Register r1
3
Carry
5
Address
Value
3
Instruction Register
MOV r1,5

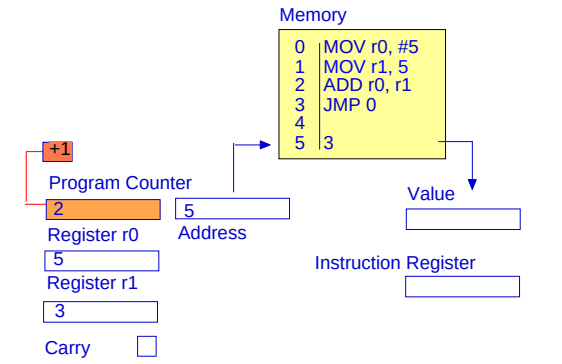
Memory
0 MOV r0, #5
1 MOV r1, 5
2 ADD r0, r1
3 JMP 0
4
5 3
+1
Program Counter
2
Register r0
5
Register r1
3
Carry
5
Address
Value
Instruction Register

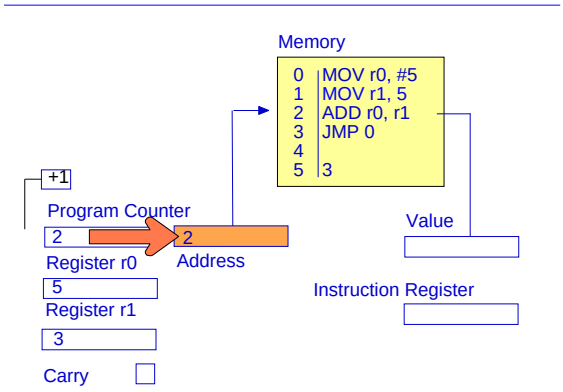
Memory
0 MOV r0, #5
1 MOV r1, 5
2 ADD r0, r1
3 JMP 0
4
5 3
+1
Program Counter
2
2
Address
Value
Register r0
5
Register r1
Instruction Register
3
Carry

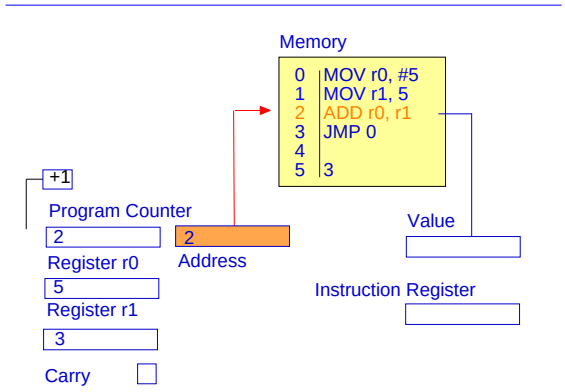
Memory
0 MOV r0, #5
1 MOV r1, 5
2 ADD r0, r1
3 JMP 0
4
5 3
+1
Program Counter
2
2
Address
Value
Register r0
5
Register r1
Instruction Register
3
Carry

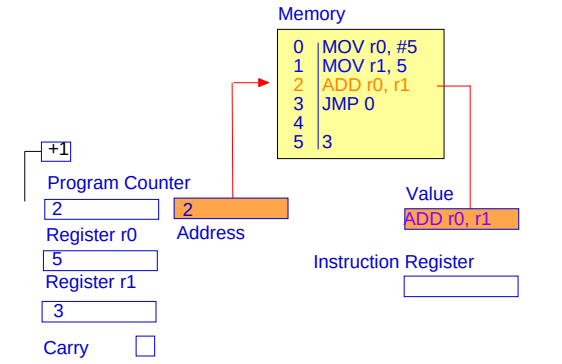
Memory
0 MOV r0, #5
1 MOV r1, 5
2 ADD r0, r1
3 JMP 0
4
5 3
+1
Program Counter
2
2
Address
Value
ADD r0, r1
Register r0
5
Register r1
Instruction Register
3
Carry

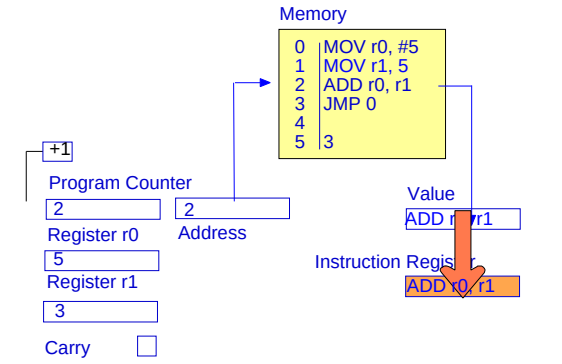
Memory
0 MOV r0, #5
1 MOV r1, 5
2 ADD r0, r1
3 JMP 0
4
5 3
+1
Program Counter
2
2
Address
Value
Register r0
5
Register r1
Instruction Register
ADD r0, r1
3
Carry

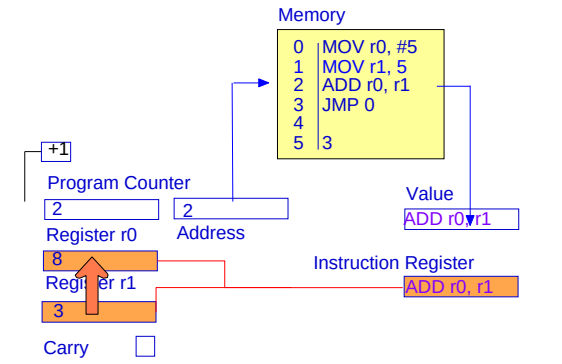
Memory
0 MOV r0, #5
1 MOV r1, 5
2 ADD r0, r1
3 JMP 0
4
5 3
+1
Program Counter
2
2
Address
Value
Register r0
8
Instruction Register
ADD r0, r1
3
Carry

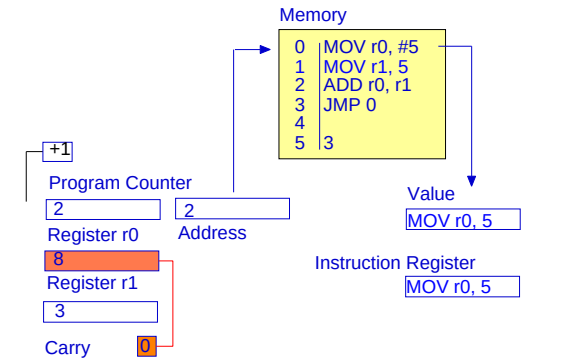
Memory
0 MOV r0, #5
1 MOV r1, 5
2 ADD r0, r1
3 JMP 0
4
5 3
+1
Program Counter
2
2
Address
Value
MOV r0, 5
Register r0
8
Register r1
Instruction Register
MOV r0, 5
3
Carry
0

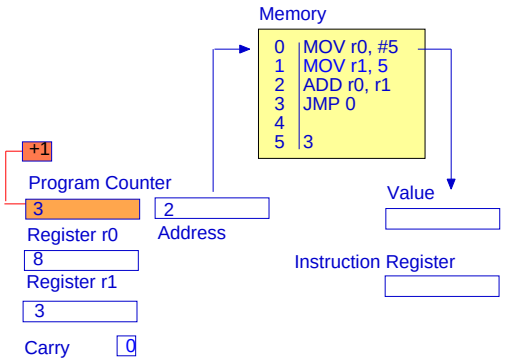
Memory
0 MOV r0, #5
1 MOV r1, 5
2 ADD r0, r1
3 JMP 0
4
5 3
+1
Program Counter
3
Register r0
8
Register r1
3
Carry
0
2
Address
Value
Instruction Register

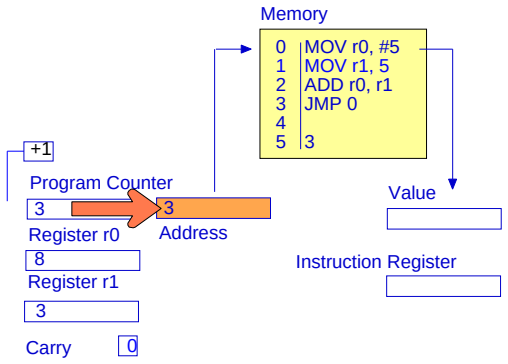
Memory
0 MOV r0, #5
1 MOV r1, 5
2 ADD r0, r1
3 JMP 0
4
5 3
+1
Program Counter
3
3
Address
Register r0
8
Register r1
3
Carry
0
Value
Instruction Register

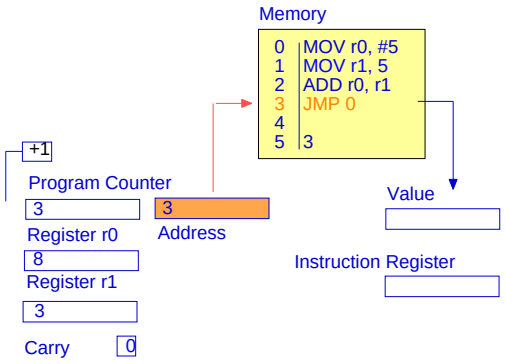
Memory
0 MOV r0, #5
1 MOV r1, 5
2 ADD r0, r1
3 JMP 0
4
5 3
+1
Program Counter
3
Register r0
8
Register r1
3
Carry
0
3
Address
Value
Instruction Register

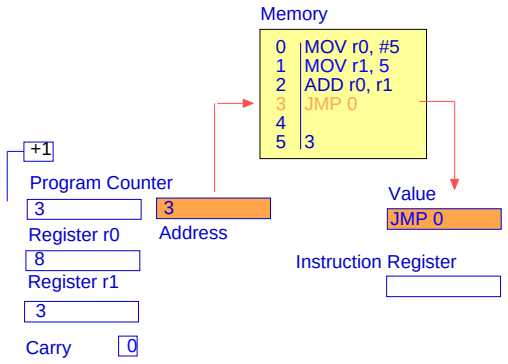
Memory
0 MOV r0, #5
1 MOV r1, 5
2 ADD r0, r1
3 JMP 0
4
5 3
+1
Program Counter
3
Register r0
8
Register r1
3
Carry
0
3
Address
Value
JMP 0
Instruction Register

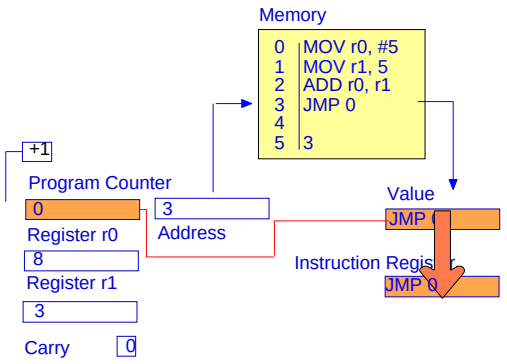
Memory
0 MOV r0, #5
1 MOV r1, 5
2 ADD r0, r1
3 JMP 0
4
5 3
+1
Program Counter
0
Register r0
8
Register r1
3
Carry
0
3
Address
Value
Instruction Register
JMP 0

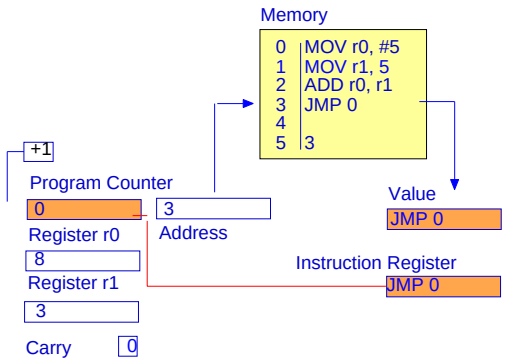
Memory
0 MOV r0, #5
1 MOV r1, 5
2 ADD r0, r1
3 JMP 0
4
5 3
+1
Program Counter
0
Register r0
8
Register r1
3
Carry
0
3
Address
Value
JMP 0
Instruction Register
JMP 0